WIRING DIAGRAM
Connection Kit UcD180HG

hypex electronics

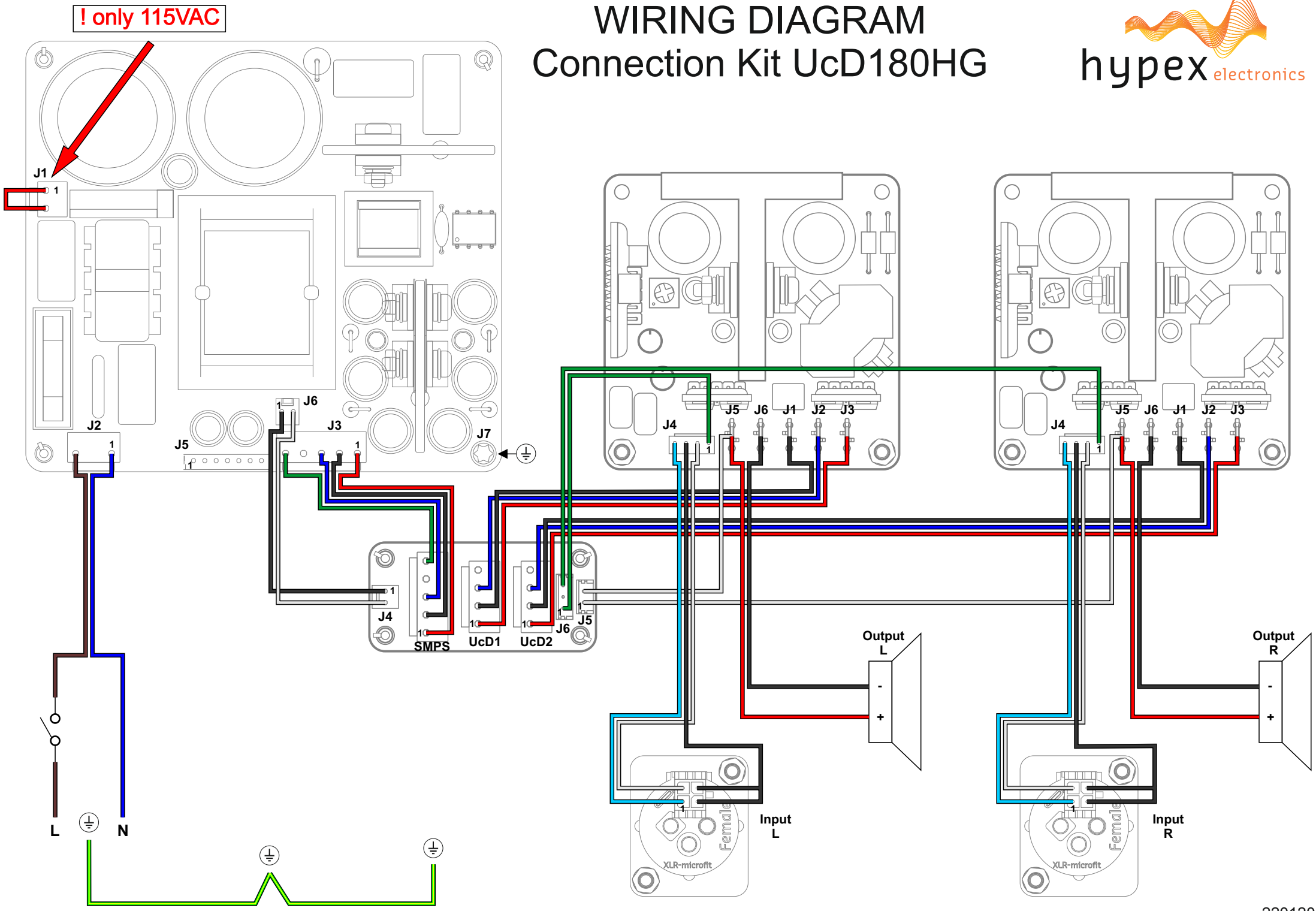

220120

WIRING DIAGRAM
Connection Kit UcD400HG

hypex electronics

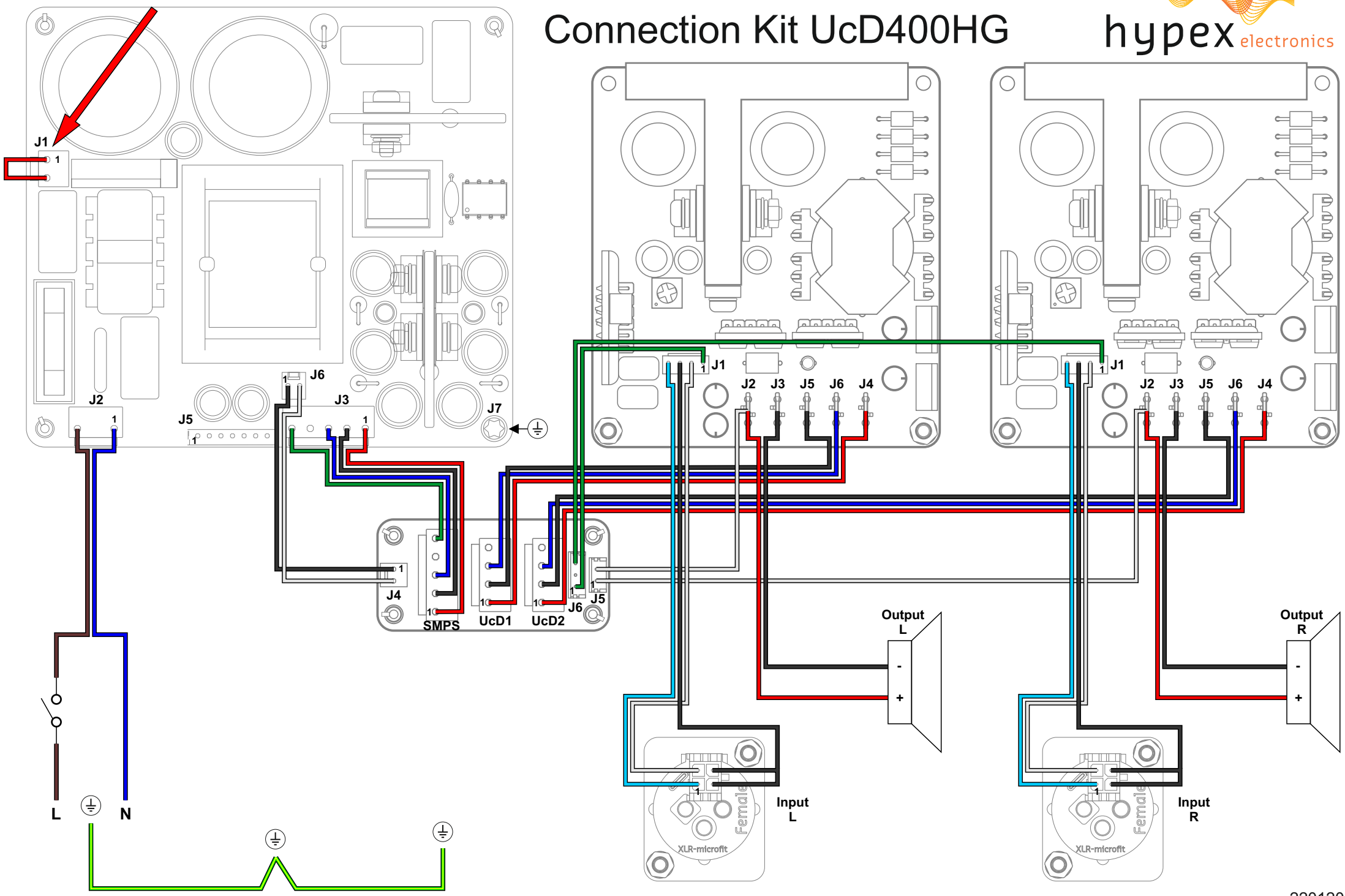

220120